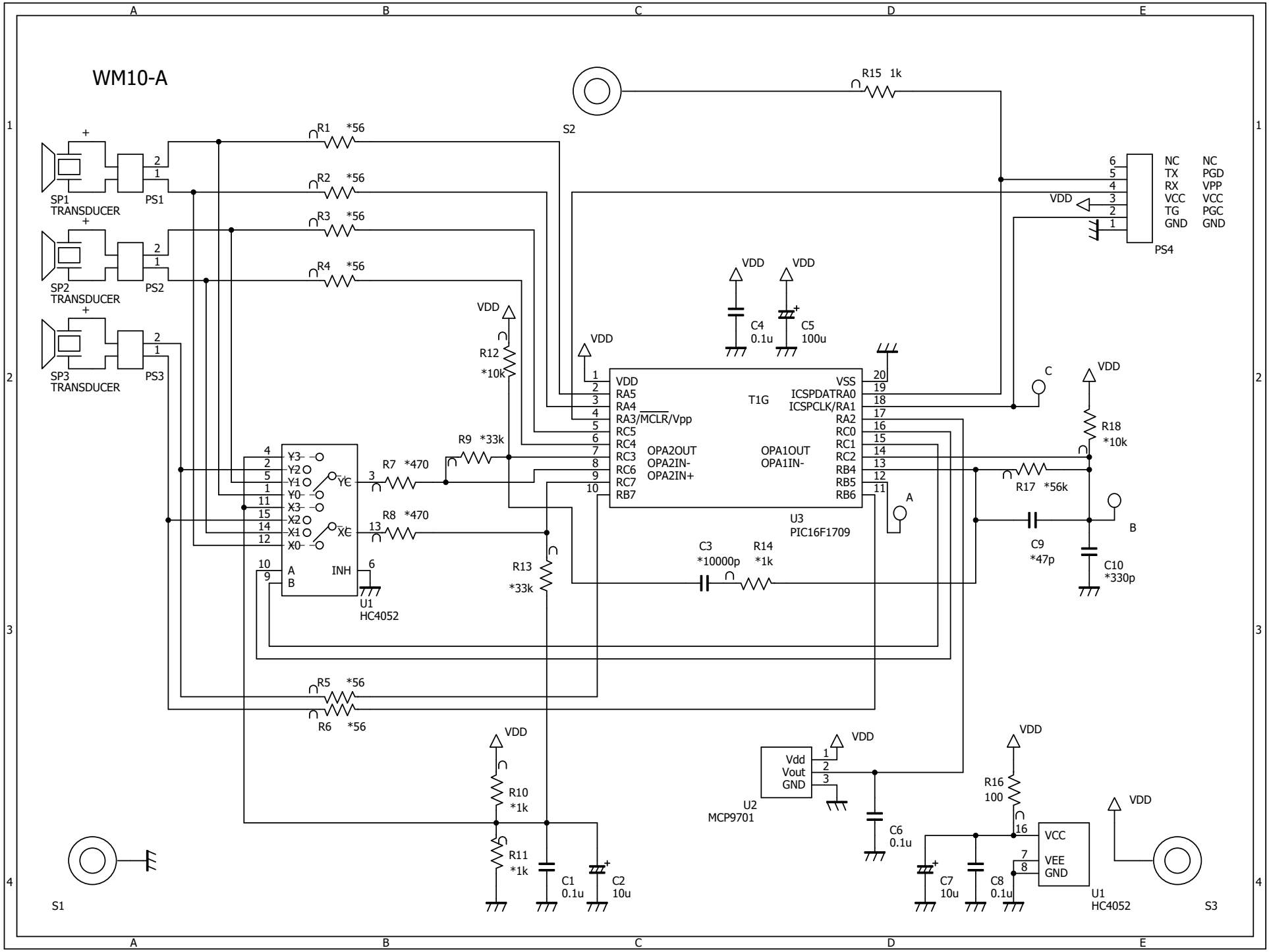
WM10-A
SP1
TRANSDUCER
PS1
SP2
TRANSDUCER
PS2
SP3
TRANSDUCER
PS3
R1 *56
R2 *56
R3 *56
R4 *56
R5 *56
R6 *56
R7 *470
R8 *470
R9 *33k
R10 *1k
R11 *1k
R12 *10k
R13 *33k
R14 *1k
R15 1k
R16 100
R17 *56k
R18 *10k
C1 0.1u
C2 10u
C3 *10000p
C4 0.1u
C5 100u
C6 0.1u
C7 10u
C8 0.1u
C9 *47p
C10 *330p
S1
S2
S3
PS4
NC NC
TX PGD
RX VPP
VCC VCC
TG PGC
GND GND
VDD
U1
HC4052
U2
MCP9701
Vdd
Vout
GND
U3
PIC16F1709
T1G
VDD
RA5
RA4
RA3/MCLR/Vpp
RC5
RC4
RC3
RC6
RC7
RB7
VSS
ICSPDATRA0
ICSPCLK/RA1
RA2
RC0
RC1
RC2
RB4
RB5
RB6
OPA2OUT
OPA2IN-
OPA2IN+
OPA1OUT
OPA1IN-
A
B
C
INH
VCC
VEE
GND